THE NATIONAL INSTITUTE OF ENGINEERING

Visveswaraya Technological University

Mysuru – 570 008

Project Report

Course : Linear Intergeted Circuit

Topic: OpAmp

Semester: IV

Submitted By :

DHEEKSHITHA GJ - 4NI24EC041

Section : C

Submitted To :

Prof. Remya.Jayachandran

Assistant Professor
ECE Department
Department of Electronics and Communication

Engineering The National Institute of Engineering

(Autonomous Institute under VTU, Belagavi) Mysuru – 570 008

Characteristics and parameters of Op-Amp

To study and measure the characteristics and parameters of an Op-amp (IC-741):

(a) Input bias current at inverting terminal

(b) Input bias current at non-inverting terminal

(c) Input offset current

(d) Input offset voltage

(e) Slew rate

Introduction

An operational amplifier is a direct coupled high gain amplifier usually consisting of one or more differential amplifiers and followed by a level translator and an output stage. The output stage is generally a push-pull or push-pull complementary-symmetry pair. An operational amplifier is available as a single integrated circuit package.

The operational amplifier is a versatile device that can be used to amplify dc as well as ac input signals and was originally designed for performing mathematical operations such as addition, subtraction, multiplication and integration. Thus, the word operational amplifier stems for its original use for these mathematical operations and is abbreviated to op-amp. With the addition of suitable external feedback components, the modern day op-amp can be used for a variety of applications, such as ac and dc signal amplification, active filters, oscillators, comparators, regulators and others.

Since an op-amp is a multistage amplifier, it can be represented by a block diagram as shown in Fig. 1.

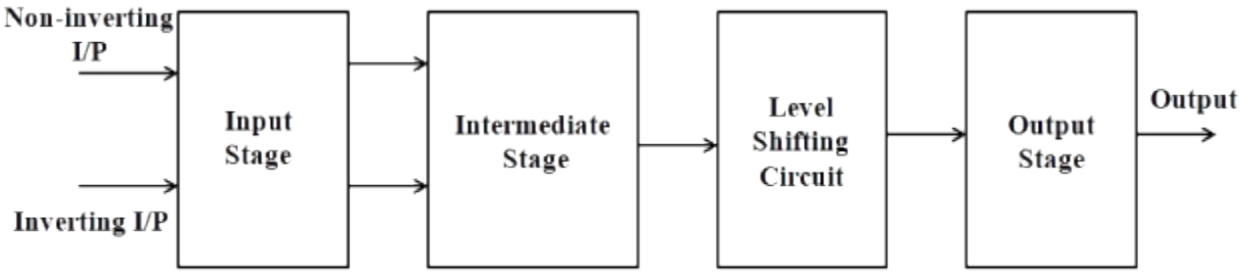

Fig1:Block diagram of op-amp

- The input stage is the dual input, balanced-output differential amplifier. This stage generally provides most of the voltage gain of an amplifier and also establishes the input resistance of the op-amp. The intermediate stage is usually another differential amplifier, which is driven by the output of the first stage. In most amplifiers the intermediate stage is the dual input, unbalanced (single-ended) output. Because direct coupling is used, the dc voltage at the output of the intermediate stage is well above ground potential. Therefore, generally, the level translator (shifting) circuit is used after the intermediate stage to shift the dc level at the output of the intermediate stage downward to zero volts with respect to ground. The final stage is usually a push-pull complementary amplifier output stage. The output stage increases the output voltage swing and raises the current supplying capability of the op-amp. A well-designed output stage also provides low output resistance.

- Schematic symbol

Fig. 2 shows the schematic symbol of an op-amp

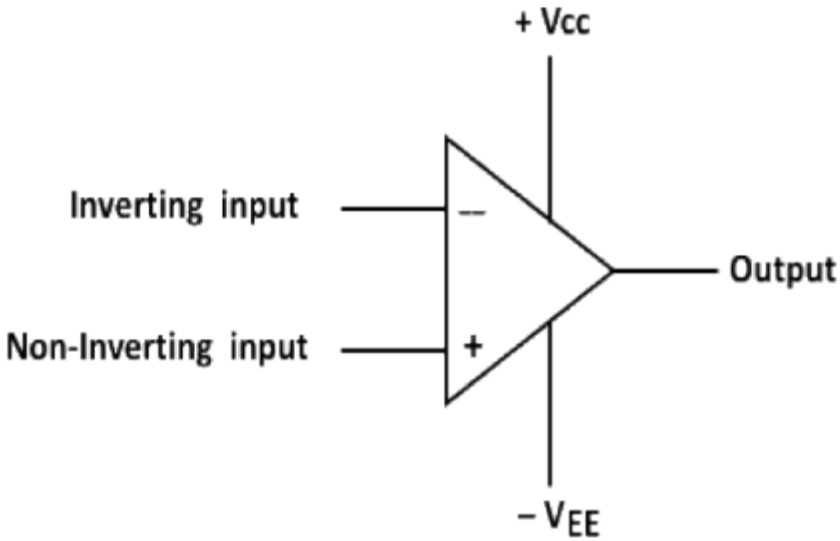

Fig-2: Schematic symbol of op-amp

The input differential amplifier stage of the op-amp is designed to be operated in the differential mode, the differential inputs are designated by the (+) and (-) notations. The (+) input is the non-inverting input. An ac signal (or dc voltage) applied to this input produces an in-phase (or same polarity) signal at the output. On the other hand, the (-) input is the inverting input because an ac signal (or dc voltage) applied to this input produces a 180° out of phase (or opposite polarity) signal at the output.

- Op-amp IC-741 pin configuration

The pin configuration of IC-741 general purpose operational amplifier is shown in Fig. 6. The reference point of the chip is the notch at the top. The pins are numbered in a counter clockwise direction, starting at the notch.

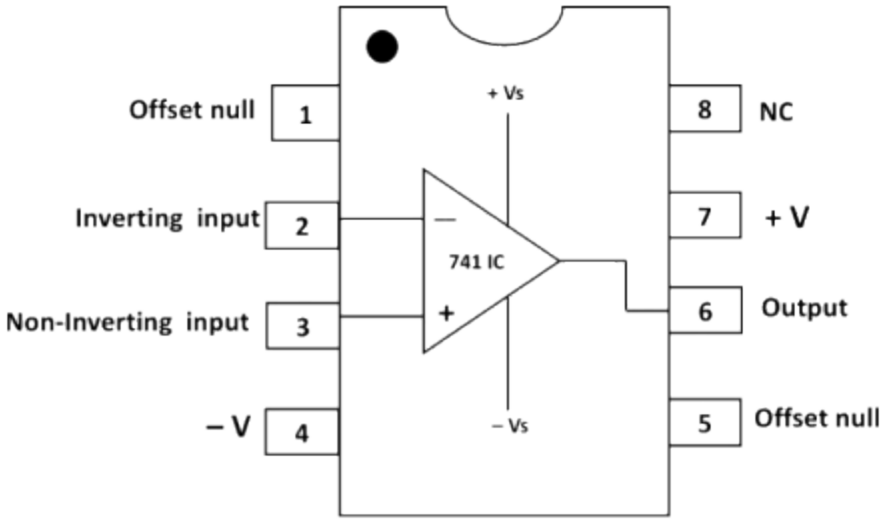

Fig-3: Pin diagram of op-amp IC-741

Pin 1 and Pin 5 are offset null pins. Offset null is a calibration feature of the op-amp. The op-amp is so sensitive to the input voltage that at times, the output will generate a signal even when there is no intentional input. To avoid this condition for certain applications, offset null pins are provided. They are usually connected to a variable resistance such as a potentiometer. The potentiometer can be adjusted to produce a zero-output voltage from Pin 6.

Pin 2 and Pin 3 are two input pins. Both inputs, pin 2 and pin 3, generate an output at Pin 6, but they generate opposite polarities. Pin 2 is the inverting input. Any signal applied to Pin 2 generates a signal of opposite polarity at the output. The non-inverting input, Pin 3, generates an output of the same polarity at Pin 6.

Power to the op-amp is provided through Pin 4 and Pin 7. Pin 4 is either connected to ground or a negative voltage value from 3 to 18 volts. Pin 7 is connected to the positive voltage of the power supply.

The output of the amplifier is at Pin 6.

Pin 8 is not used. 'NC' stands for no connection.

- <u>Characteristics of an ideal op-amp:</u>

An ideal op-amp would exhibit the following electrical characteristics:

• Infinite voltage gain A.

• Infinite input resistance Ri, so that almost any signal source can drive it and there is no loading of the preceding stage.

• Zero output resistance Ro, so that the output can drive an infinite number of other devices.

• Zero output voltage when input voltage is zero.

• Infinite bandwidth, so that any frequency signal from 0 to ∞ Hz can be amplified without attenuation.

• Infinite common-mode rejection ratio (CMRR), so that the output common mode noise voltage is zero.

• Infinite slew rate, so that output voltage changes occur simultaneously with input voltage changes.

Parameters of an op-amp

Measurement of Input Offset Voltage of 741 Op-Amp

- An ideal operational amplifier gives zero output when both input terminals are at the same voltage. However, in a practical op-amp like the 741, a small differential voltage is required between the inputs to make the output zero. This small voltage is called input offset voltage (Vio).
- In this experiment, the 741 op-amp is connected in a high-gain closed-loop configuration. Both input terminals are grounded through resistors. Ideally, the output should be zero. But due to internal transistor mismatch and bias currents, a small DC output voltage appears.
- The output voltage is related to the input offset voltage by the gain of the circuit:
- Vout=(1+RfR1)×VioV_{out} = (1 + \frac{R_f}{R_1}) \times V_{io}Vout =(1+R1Rf)×Vio
- Therefore, the input offset voltage is calculated as:
- Vio=Vout1+RfR1V_{io} = \frac{V_{out}}{1 + \frac{R_f}{R_1}}Vio=1+R1 RfVout
- Thus, by measuring the output voltage and knowing the closed-loop gain, the input offset voltage of the 741 op-amp can be determined.

Fig-4: Input offset voltage V_{io}

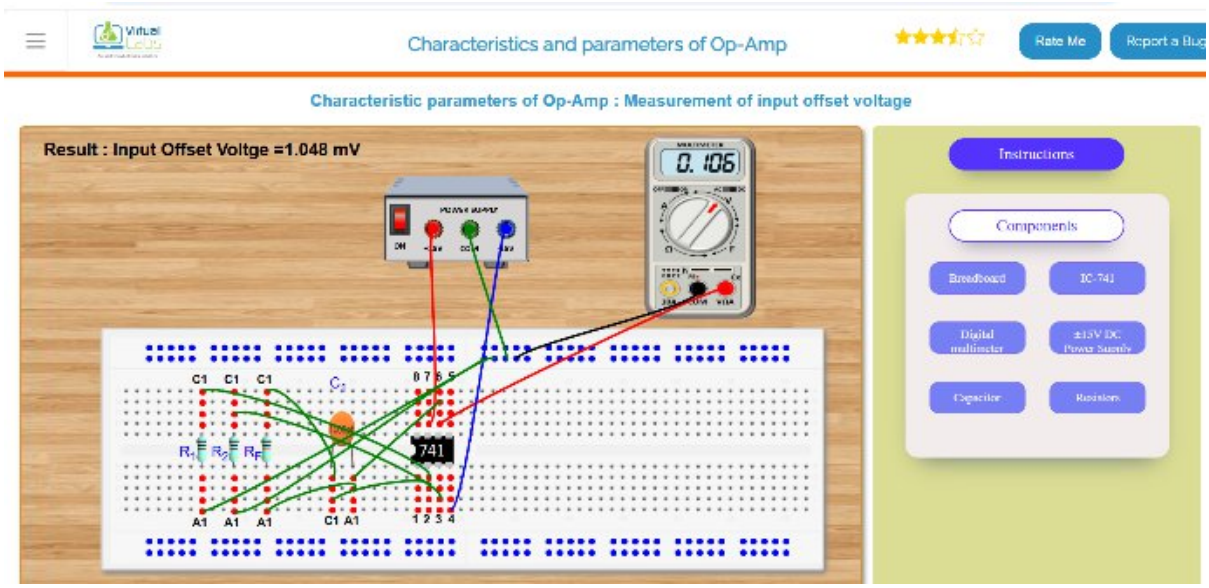

Measurement of Input Offset Current of 741 Op-Amp

To measure the input offset current (Iio) of a 741 operational amplifier

- An ideal operational amplifier draws zero current at its input terminals. However, in a practical op-amp like the 741, small currents called input bias currents flow into the inverting and non-inverting terminals. Due to internal transistor mismatch, these two currents are not exactly equal. The difference between them is called the input offset current (Iio).
- In this experiment, the 741 is connected in a high-resistance feedback configuration. Because the feedback resistor value is large, even a very small offset current produces a measurable output voltage.
- The output voltage is related to the input offset current by:
- Vo=Iio×RfV_o = I_{io} \times R_fVo=Iio×Rf
- Hence, the input offset current is calculated as:
- Iio=VoRfI_{io} = \frac{V_o}{R_f}Iio=RfVo
- By measuring the output voltage and knowing the feedback resistance, the input offset current of the 741 op-amp can be

determined.

Input Offset Voltage

The measured input offset voltage of the IC 741 is 1.048 mV.This means a very small voltage is needed between the two input terminals to make the output zero.In an ideal op-amp, this value should be zero, but in a practical IC 741, a small offset voltage always exists.

Therefore, the experiment confirms that the IC 741 has a small input offset voltage, which may cause slight errors in sensitive circuits.

Fig-5: Input offset current I_{io}

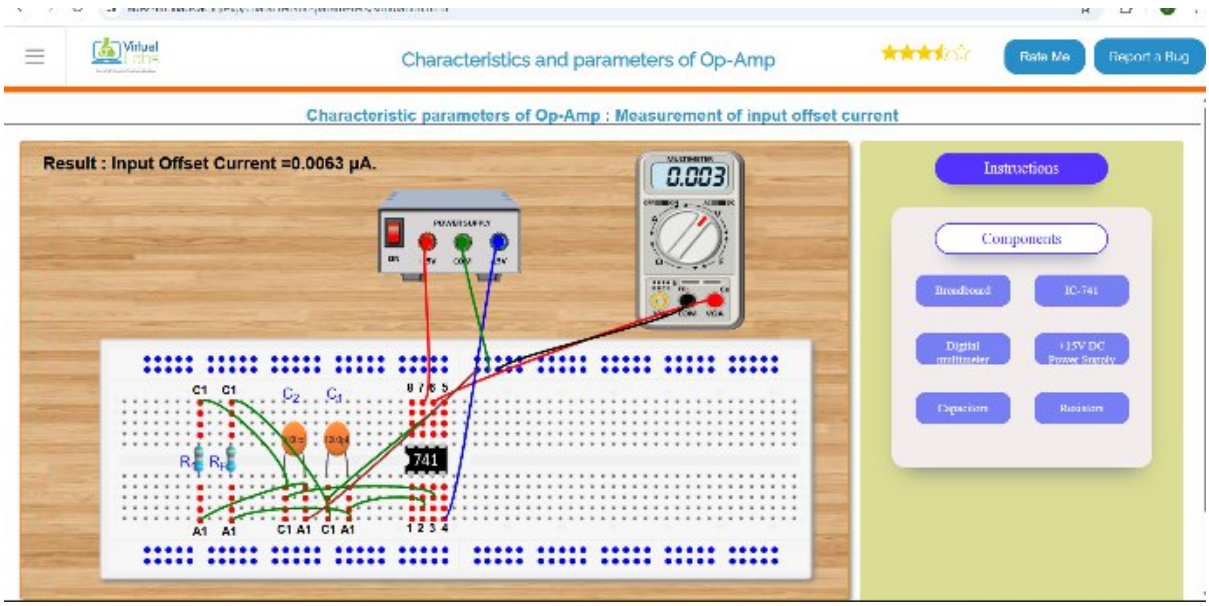

Measurement of Inverting Bias Current of 741 Op-Amp

- In an ideal op-amp, no current flows into the input terminals. But in a practical 741 op-amp, a small current called input bias current flows into both the inverting and non-inverting terminals due to internal transistor operation.
- In this experiment, the inverting bias current is measured by connecting a large feedback resistor (Rf) between the output and the inverting input, while the non-inverting input is grounded. Because Rf has a high value, even a very small bias current produces a measurable output voltage.
- The output voltage is related to the inverting bias current by:
- Vo=IB1×RfV_o = I_{B1} \times R_fVo=IB1×Rf
- Therefore, the inverting bias current is calculated as:
- IB1=VoRfI_{B1} = \frac{V_o}{R_f}IB1=RfVo
- By measuring the output voltage and knowing the feedback resistance, the inverting bias current of the 741 op-amp can be

determined.

Input Offset Current

The measured input offset current of the IC 741 is 0.0063 µA.This shows that there is a very small difference between the bias currents of the inverting and non-inverting terminals. In an ideal op-amp, this value should be zero, but in a practical IC 741, a small offset current always exists.

The measured value is very small (in microamperes), which means the two input currents are nearly equal.

Therefore, the experiment confirms that the IC 741 has a small input offset current, which may cause minor errors in sensitive circuits.

Fig-6: Input bias current at inverting terminal

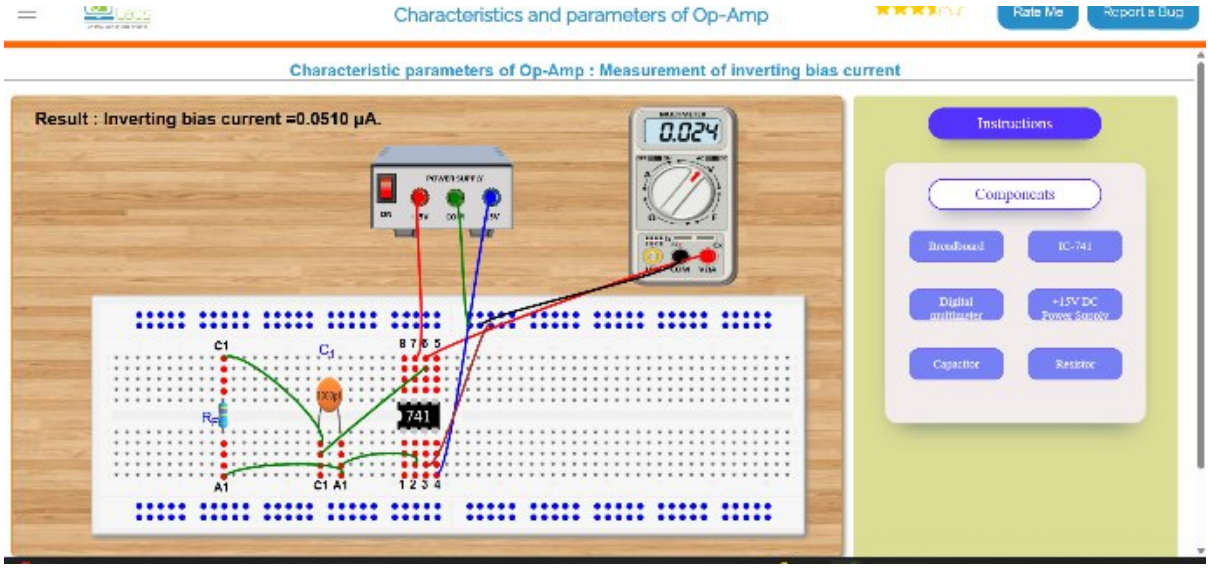

Measurement of Non-Inverting Bias Current of 741 Op-Amp

- In a practical 741 op-amp, a small current flows into both input terminals. This current is called input bias current. The current flowing into the non-inverting terminal is called the non-inverting bias current (IB2).
- In this experiment, the inverting input is properly connected, and a resistor (R1) is connected at the non-inverting terminal. Due to the bias current flowing into the non-inverting input, a small voltage is developed across the resistor. This voltage appears at the output.
- Since the resistor value is known, the non-inverting bias current is calculated using:
- IB2=VoR1I_{B2} = \frac{V_o}{R_1}IB2=R1Vo
- Thus, by measuring the output voltage and knowing the resistance value, the non-inverting bias current of the 741 op-amp can be determined.

Inverting Input Bias Current

The measured inverting input bias current of the IC 741 is 0.0510 μA.

This shows that a small amount of current flows into the inverting terminal of the op-amp. In an ideal op-amp, the input current should be zero, but in a practical IC 741, a small bias current exists due to its internal transistor structure.

The measured value is very small (in microamperes) and lies within the expected range for a 741 op-amp.

Therefore, the experiment confirms that the IC 741 has a small but finite inverting input bias current, which may cause small DC errors in precision circuits.

Fig-7: Input bias current at Non inverting terminal

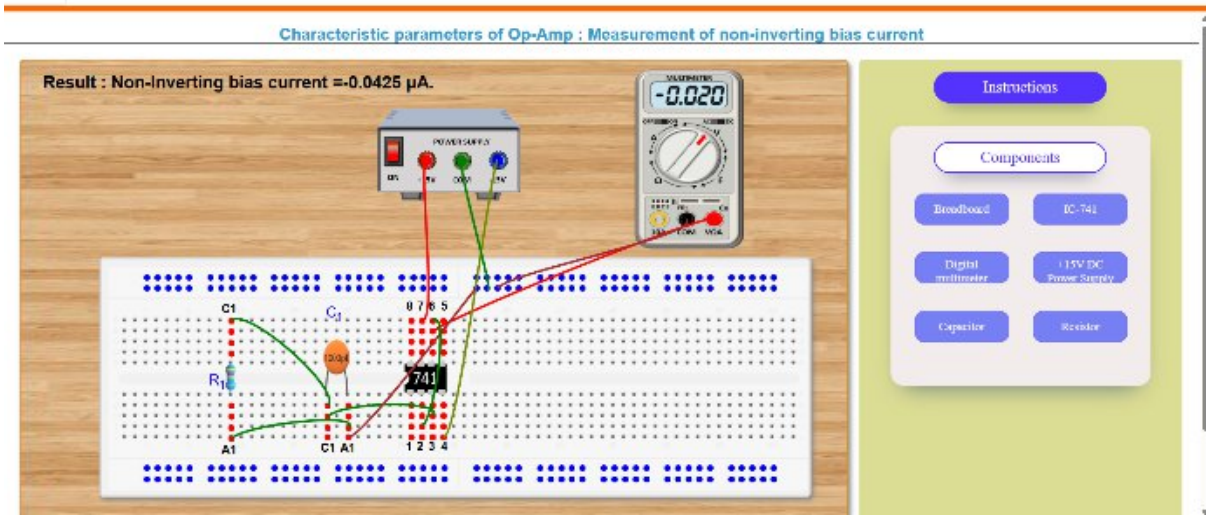

Measurement of Non-Inverting Input Bias Current (IC 741)

The observed result shows that the non-inverting input bias current of the IC 741 is approximately:

Input bias current is the small DC current that flows into or out of the input terminals of an operational amplifier due to the internal transistor biasing. In a bipolar op-amp like the 741, this current exists because the input stage consists of bipolar junction transistors (BJTs), which require base current for operation.

The negative sign of the measured current indicates the direction of current flow, meaning the current is flowing out of the non-inverting terminal rather than into it (based on the chosen measurement reference).

The measured magnitude (in the order of microamperes) is consistent with the theoretical characteristics of the 741 op-amp, whose typical input bias

current lies in the microampere range.

- Slew rate is defined as the maximum rate of change of output voltage with respect to time. It indicates how fast an op-amp can respond to rapid changes in the input signal. It is expressed in volts per microsecond (V/μs).
- In this experiment, a high-frequency sinusoidal signal is applied to the 741 op-amp. As the frequency increases, the output waveform starts to distort and becomes triangular. This happens because the op-amp cannot change its output voltage fast enough, and the maximum slope of the output waveform represents the slew rate.
- The slew rate is calculated using:
- [S.R. = 2\pi f_{max} V_m]
- where

  (f_{max}) = frequency at which distortion begins,

  (V_m) = peak amplitude of output signal.
- By observing the waveform on the CRO and measuring the required values, the slew rate of the 741 op-amp can be determined.

The measured non-inverting input bias current of the IC 741 operational amplifier is −0.0425 μA. This confirms the presence of a small but finite input current due to the internal bipolar transistor structure of the op-amp. The magnitude of the measured current lies within the expected theoretical range for a 741 op-amp. The negative sign indicates the direction of current flow with respect to the measurement reference. The result verifies that practical operational amplifiers deviate from ideal assumptions and exhibit finite input bias currents, which can introduce small DC errors in precision circuits.

Fig-8: Slew Rate

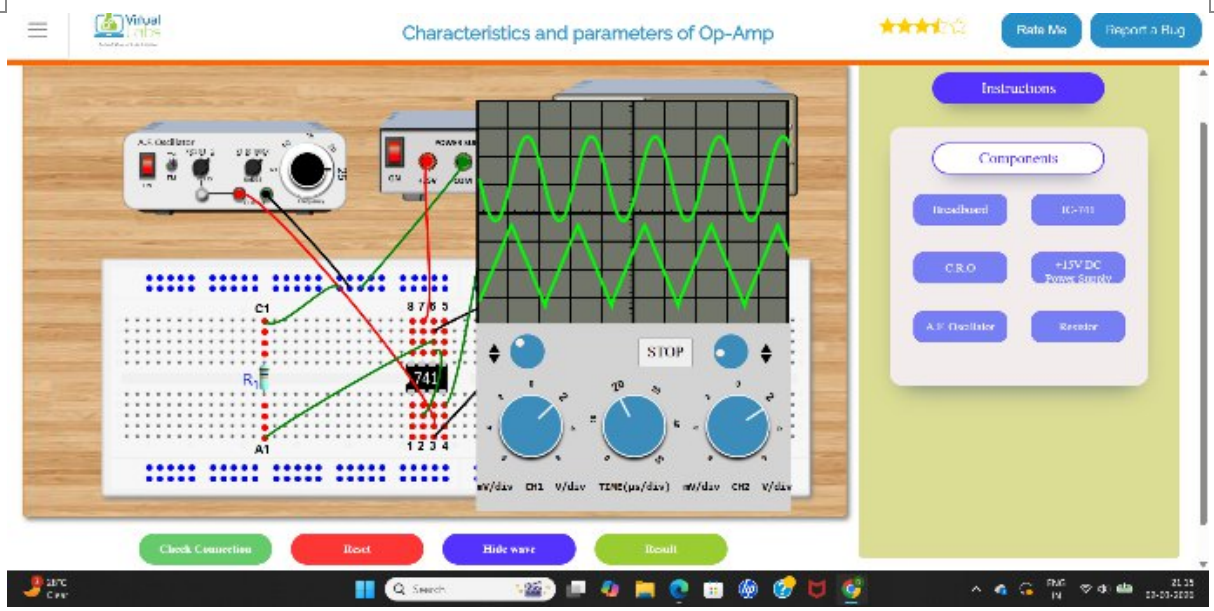

The displayed waveform represents the input and output characteristics of an operational amplifier (IC 741) under closed-loop operation. The upper trace corresponds to the sinusoidal input signal applied from the function generator, while the lower trace represents the output voltage observed on the CRO.

When a sinusoidal signal is applied to the input of the op-amp, the amplifier multiplies this signal by its closed-loop voltage gain. In an ideal linear operating region, the output waveform maintains the same shape and frequency as the input but with an increased amplitude determined by:

where is the closed-loop voltage gain.

From the graph:

1. Waveform Shape:

   The output waveform preserves the periodic nature of the input signal, indicating that the op-amp is operating in its linear region.

2. Phase Relationship:

   Depending on the configuration:

   - If the circuit is in inverting mode, the output is 180° out of phase with the input.
   - If it is in non-inverting mode, the output is in phase with the input.

The graph shows a phase relationship consistent with the specific

configuration used in the setup.

3. Amplitude Difference:

   The output amplitude is greater than the input amplitude, demonstrating voltage amplification. The gain is controlled by the external resistor network connected to the op-amp.

4. Frequency:

   The frequency of the output waveform remains the same as the input frequency, since an op-amp does not change the signal frequency—only its amplitude and phase.

5. Linearity:

   The smooth and undistorted waveform indicates that the output voltage is within the supply limits (±15 V). No clipping is observed, meaning the amplifier is not in saturation.

Conclusion:

The output graph verifies the fundamental operation of the operational amplifier as a linear voltage amplifier. The output signal maintains the same frequency and waveform as the input but exhibits amplification (and possible phase inversion), as determined by the closed-loop gain configuration. This confirms proper functioning of the op-amp within its linear operating region.

THANK YOU